SS-X70ED/X90ED

SERVICE MANUAL

Ver 1.3 2004. 09

Photo : SS-X90ED

US Model
Canadian Model
AEP Model
UK Model
E Model

SPECIFICATIONS

SS-X90ED

Speaker system	3-way, magnetically shielded
Loud speaker units	Woofer: 16.5 cm (6 1/2 inches), cone type × 2 Mid range: 16.5 cm (6 1/2 inches), cone type Tweeter: 2.5 cm (1 inch), dome type
Enclosure type	Bass reflex
Rated impedance	4 ohms
Maximum input power	200 watts
Characteristic sensitivity level	90 dB (2.83 V/m)
Efficiency frequency range	35 Hz-70,000 Hz
Cross over frequency	450 Hz, 3,500 Hz
Dimensions (w/h/d)	Approx. 260 × 1,000 × 300 mm (10 1/4 × 39 3/8 × 11 7/8 inches)
Weight per speaker	Approx. 32 kg (70 lb 6 oz)
Supplied accessories	Spike (4)

SS-X70ED

Speaker system	3-way, magnetically shielded
Loud speaker units	Woofer: 16.5 cm (6 1/2 inches), cone type Mid range: 16.5 cm (6 1/2 inches), cone type Tweeter: 2.5 cm (1 inch), dome type
Enclosure type	Bass reflex
Rated impedance	4 ohms
Maximum input power	150 watts
Characteristic sensitivity level	89 dB (2.83V/m)
Efficiency frequency range	40 Hz-70,000 Hz
Cross over frequency	450 Hz, 3,500Hz
Dimensions (w/h/d)	Approx. 260 × 900 × 300 mm (10 1/4 × 35 1/2 × 11 7/8 inches)
Weight per speaker	Approx. 28 kg (61 lb 8 oz)
Supplied accessories	Spike (4)

Design and specifications are subject to change without notice.

SPEAKER SYSTEM

9-873-449-04
2004I16-1
© 2004.09

Sony Corporation
Audio Group
Published by Sony Engineering Corporation

SONY®

EXPLODED VIEW AND PARTS LIST

NOTE:
- Color Indication of Appearance Parts Example:
  KNOB, BALANCE (WHITE) . . . (RED)
  ↑ Parts Color ↑ Cabinet's Color

1. SS-X70ED

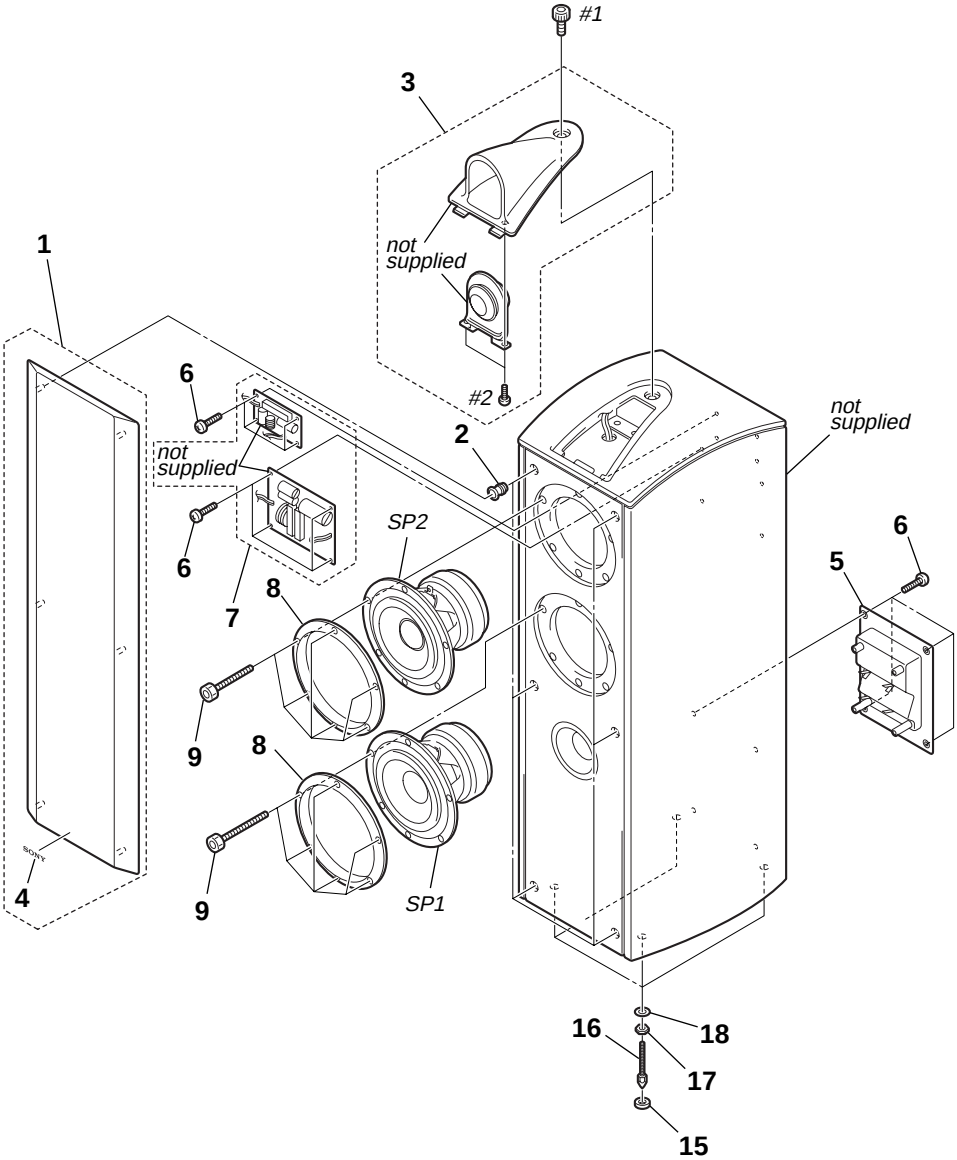

Ref. No.	Part No.	Description	Remarks
1	X-4954-515-1	FRAME ASSY, GRILLE (BLACK)	
1	X-4954-645-1	FRAME ASSY, GRILLE (WOODY)	
2	4-210-830-01	CATCHER	
3	X-4954-504-1	COVER ASSY, TW (WOODY)	
3	X-4954-505-1	COVER ASSY (B), TW (BLACK)	
4	4-949-384-11	EMBLEM (NO.6), SONY	
5	1-694-890-11	TERMINAL BOARD	
6	4-874-614-11	SCREW +BVTP 3.5X14	
7	1-761-514-11	MOUNTED PC BOARD	
8	4-237-380-01	RING, ORNAMENTAL	
9	4-238-926-01	BOLT, HEXAGON SOCKET	
15	4-238-448-01	PLATE	
16	4-238-445-01	SPIKE	
17	4-238-446-01	NUT	
18	4-238-447-01	WASHER	

Ref. No.	Part No.	Description	Remarks
SP1	1-825-021-11	SPEAKER (16cm)	
SP2	1-825-019-11	SPEAKER (16cm)	
#1	7-683-420-04	BOLT,HEXAGON SOCKET 4X10	
#2	7-682-148-01	SCREW +P 3X8	

****

ACCESSORIES
****

4-238-600-11	MANUAL, INSTRUCTION (ENGLISH, FRENCH, SPANISH, PORTUGUESE, CHINESE) (US, Canadian, UK, E)	
4-238-600-21	MANUAL, INSTRUCTION (ENGLISH, FRENCH, GERMAN, SPANISH, DUTCH, SWEDISH, ITALIAN, PORTUGUESE, SLOVAK, POLISH, RUSSIAN, GREEK, FINNISH, DANISH, CZECH) (APE)	

2. SS-X90ED

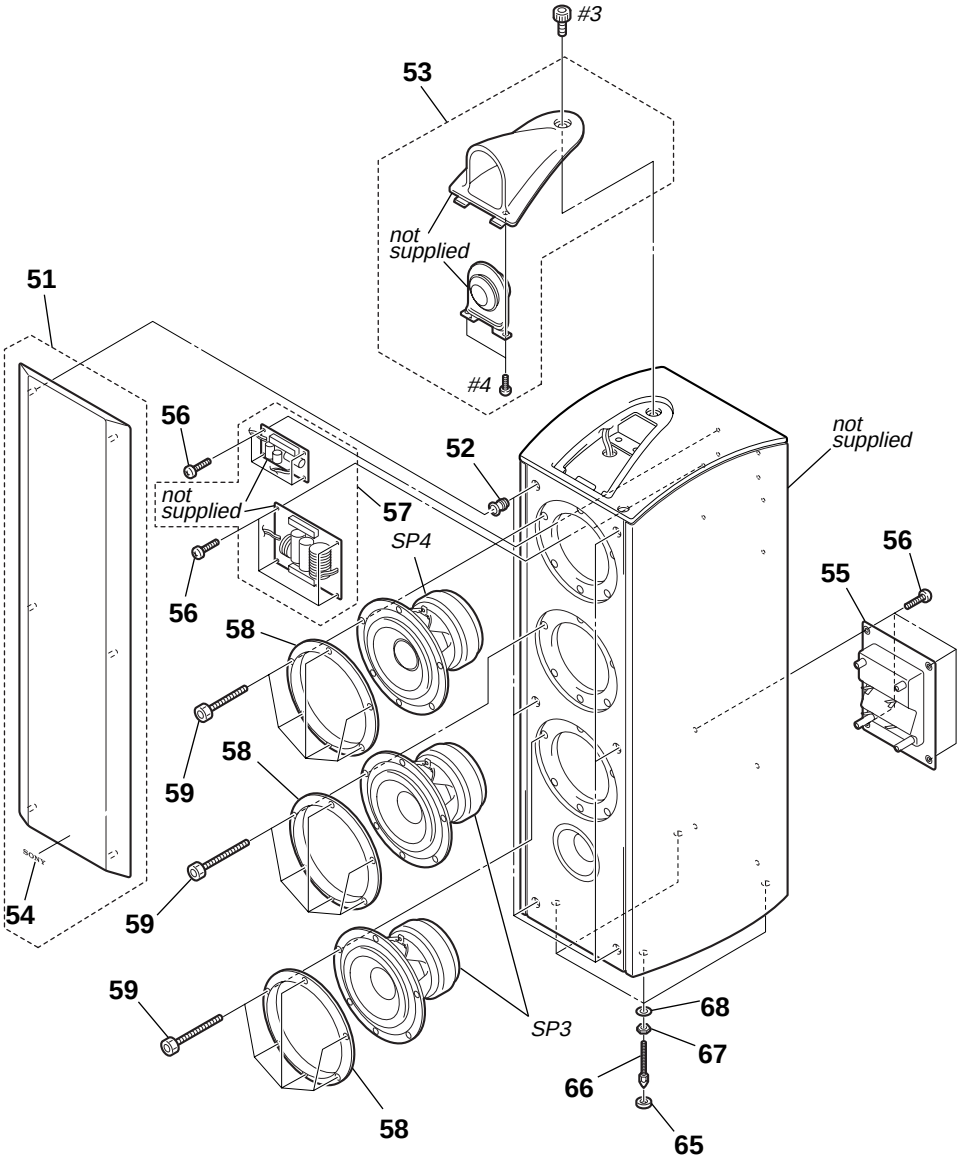

Ref. No.	Part No.	Description	Remarks
51	X-4954-516-1	FRAME ASSY, GRILLE (BLACK)	
51	X-4955-725-1	FRAME ASSY, GRILLE (WOODY)	
52	4-210-830-01	CATCHER	
53	X-4954-504-1	COVER ASSY (B), TW (WOODY)	
53	X-4954-505-1	COVER ASSY (B), TW (BLACK)	
54	4-949-384-11	EMBLEM (NO.6), SONY	
55	1-694-890-11	TERMINAL BOARD	
56	4-874-614-11	SCREW +BVTP 3.5X14 (BLACK)	
57	1-761-515-11	MOUNTED PC BOARD	
58	4-237-380-01	RING, ORNAMENTAL	
59	4-238-926-01	BOLT, HEXAGON SOCKET	
65	4-238-448-01	PLATE	
66	4-238-445-01	SPIKE	
67	4-238-446-01	NUT	
68	4-238-447-01	WASHER	

Ref. No.	Part No.	Description	Remarks
SP3	1-825-022-11	SPEAKER (16cm)	
SP4	1-825-019-11	SPEAKER (16cm)	
#3	7-683-420-04	BOLT,HEXAGON SOCKET 4X10 (BLACK)	
#4	7-682-148-01	SCREW +P 3X8	

****

ACCESSORIES
****

	4-238-600-11	MANUAL, INSTRUCTION (ENGLISH, FRENCH, SPANISH, PORTUGUESE, CHINESE) (US, Canadian, UK, E)
	4-238-600-21	MANUAL, INSTRUCTION (ENGLISH, FRENCH, GERMAN, SPANISH, DUTCH, SWEDISH, ITALIAN, PORTUGUESE, SLOVAK, POLISH, RUSSIAN, GREEK, FINNISH, DANISH, CZECH) (APE)

REVISION HISTORY

Clicking the version allows you to jump to the revised page.
Also, clicking the version at the upper right on the revised page allows you to jump to the next revised page.

Ver.	Date	Description of Revision
1.0	2001.12	New
1.1	2003.05	Change of Ref.No.51 (SPM-03020)
1.2	2004.08	Addition of SP5 and SP6 (SPM-04077)
1.3	2004.09	Deletion of SP5 and SP6 (SPM-04091)